REVISIONS				
REV.	EN NO.	DATE	DRAWN BY	APPROVED
J	12910		MAC	JAS

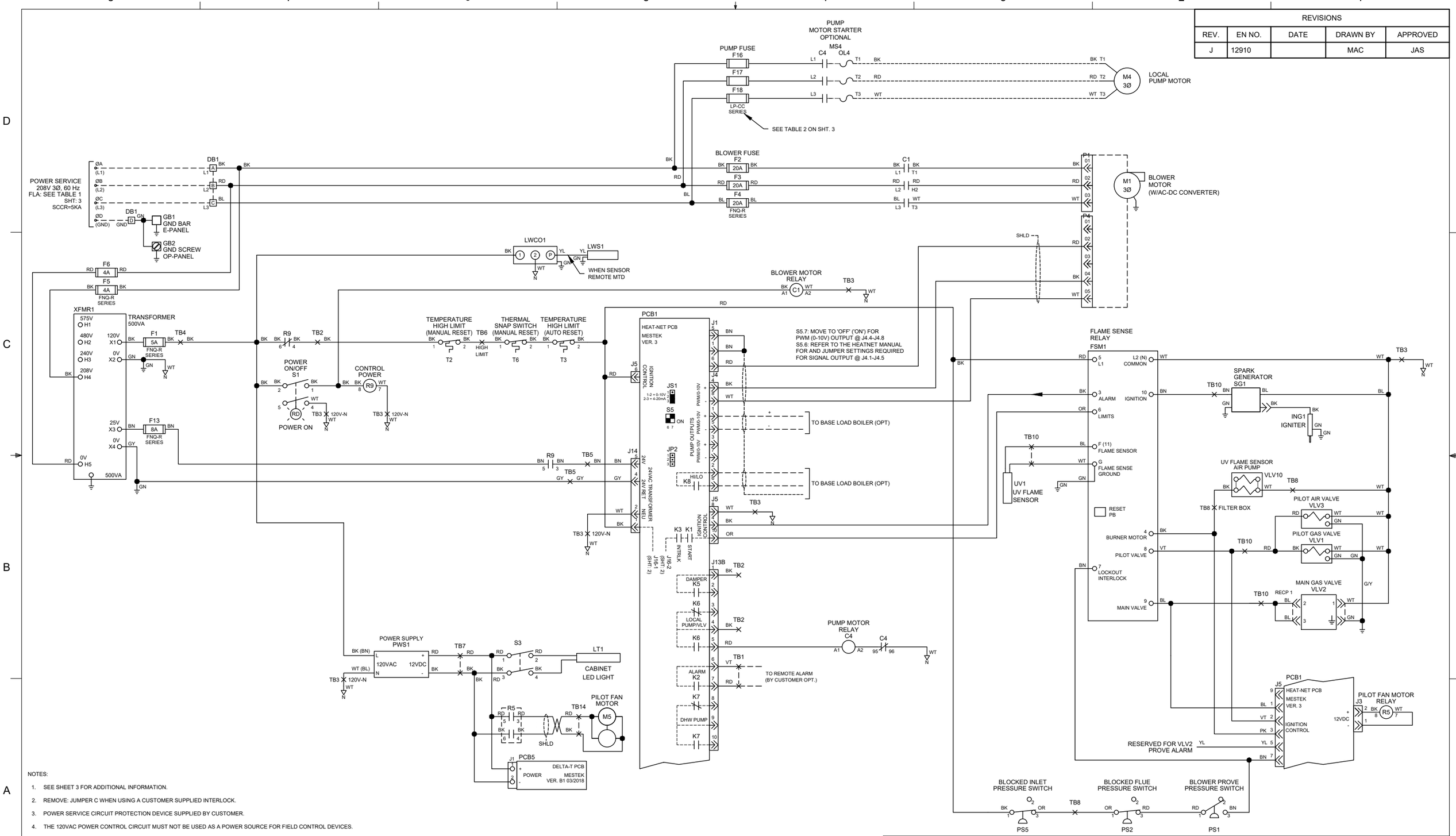

NOTES:

1. SEE SHEET 3 FOR ADDITIONAL INFORMATION.
2. REMOVE: JUMPER C WHEN USING A CUSTOMER SUPPLIED INTERLOCK.
3. POWER SERVICE CIRCUIT PROTECTION DEVICE SUPPLIED BY CUSTOMER.
4. THE 120VAC POWER CONTROL CIRCUIT MUST NOT BE USED AS A POWER SOURCE FOR FIELD CONTROL DEVICES.
5. FOR MULTIPLE BOILERS OPERATING WITH A SYSTEM AIR DAMPER WHEN IN A MASTER/MEMBER CONFIGURATION: ADD A JUMPER FROM TERMINAL TB-16 ON THE MASTER BOILER TO TERMINAL TB-16 ON ALL MEMBER BOILERS.
6. ---
7. ---
8. HEATNET "LITE" CONTROL BOARDS PROVIDED FOR SUBORDINATE CONTROL BOARDS. HEATNET ONLINE, STAGE 2, 3, 4 AND SYSTEM PUMP 2 OUTPUTS ARE NOT AVAILABLE WITH THE HEATNET "LITE" CONTROL PCB.

DIVISION	PRODUCT	DRAWN BY	DATE	DRAWING DESCRIPTION
RBI	CK3000	MAC	03/21/16	LADDER DIAGRAM
THE PRINT AND ALL INFORMATION THEREON IS PROPERTY OF THE DIVISION OF MESTEK, INC. NEITHER THE PRINT NOR THE INFORMATION THEREON MAY BE REPRODUCED OR USED IN ANY MANNER WHATSOEVER OR DIVULGED TO ANY OTHER PERSON UNLESS SPECIFICALLY AUTHORIZED BY MESTEK, INC.		CHECKED BY: JAS	DATE: 03/21/16	DRAWING NUMBER: CK3000N#RA#0#A##C3G8M7P4X4
		APPROVED BY: JAS	DATE: 03/21/16	SHEET: 1 OF 7 · SHEET SIZE: B · SCALE: N/A · REVISION: J

02/28/22
DRAWING-001

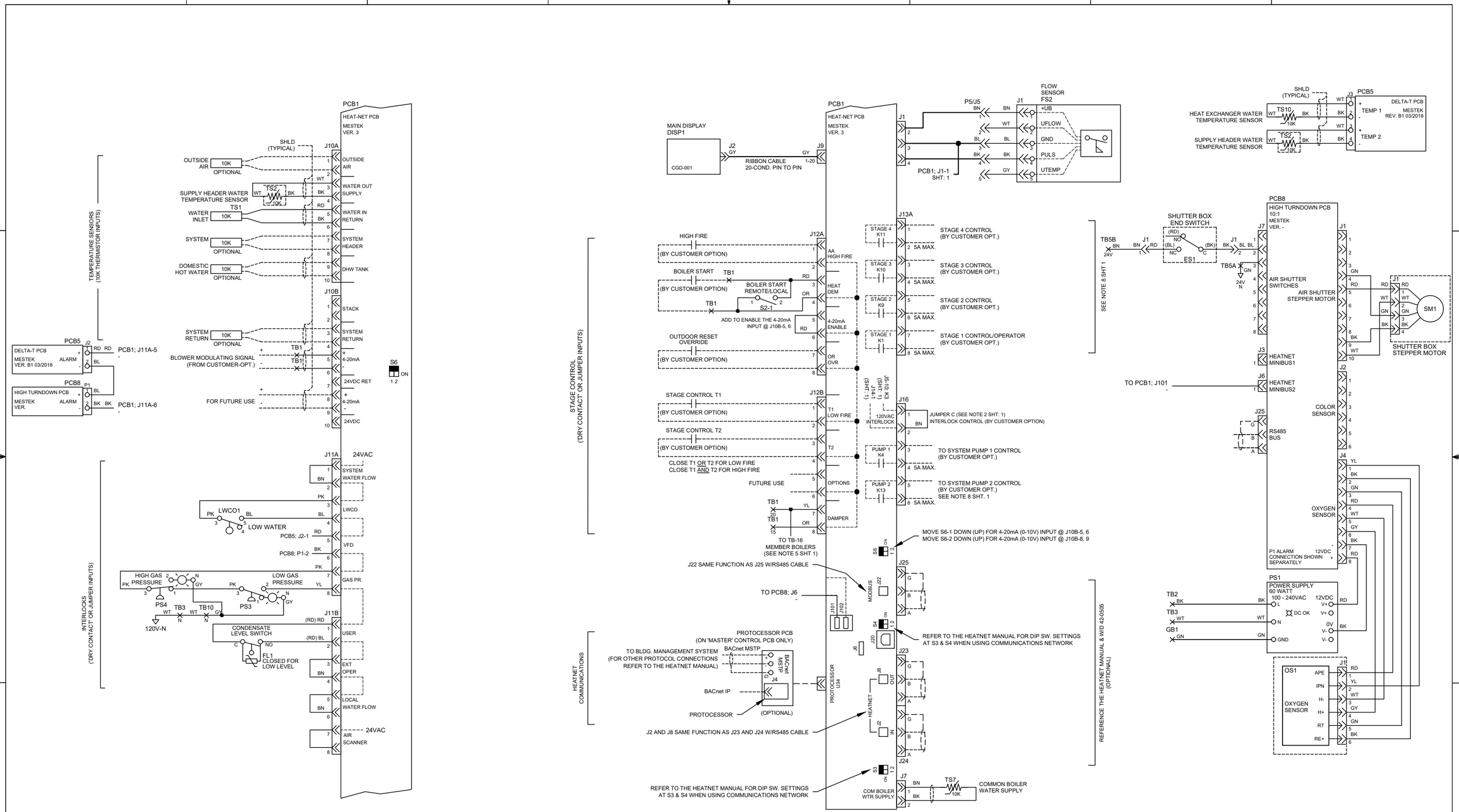

NOTES:
1. SEE SHEET 1 & 7 FOR ADDITIONAL INFORMATION.

DIVISION	DRAWING DESCRIPTION			
RBI	LADDER DIAGRAM			
PRODUCT	DRAWING NUMBER			
CK3000	CK3000N#RA#0#A##C3G8M7P4X4			
	SHEET	SHEET SIZE	SCALE	REVISION
	2 OF 7	B	N/A	J

06/30/22
DRAWING-002

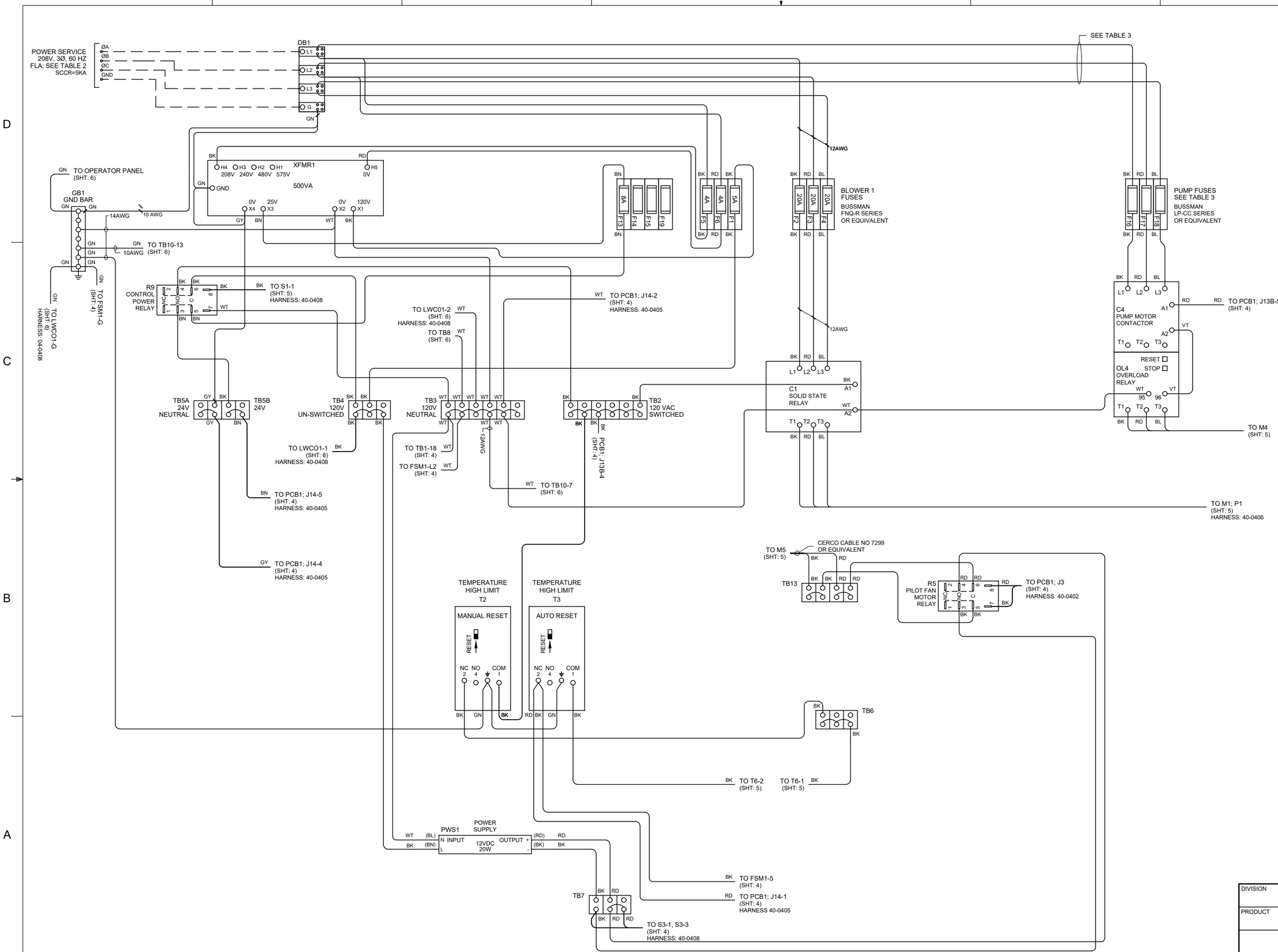

TABLE 1	
SYSTEM FULL LOAD AMPS	
MODEL (S)	FLA
CK3000	17.7
FULL LOAD AMPS (FLA) @ 208V 3Ø (NOT INCLUDING LOCAL PUMP MOTOR)	

TABLE 2				
AC MOTOR SPECIFICATION TABLE				
TYPE	MANUFACTURER	HORSE POWER	208/230VAC 3Ø	WIRE AWG
CONTACTOR	SCHNEIDER ELECTRIC (SQUARE D)	3/4	LC1D25G7	
		1		
		1-1/2		
		2		
OVERLOAD		3/4	LR9D08 (1.6-8A)	
		1		
		1-1/2	LR9D32 (6.4-32A)	
		2		
FUSE	BUSSMANN OR EQUIVALENT	3/4	LP-CC-10	(3) 14AWG
		1		
		1-1/2		
		2		
PART NUMBERS ARE BASED ON THE FULL LOAD AMP (FLA) RATINGS FOR 3Ø AC INDUCTION MOTORS AS LISTED IN ARTICLE 430 OF THE NATIONAL ELECTRICAL CODE.				

TABLE 3			
LOCAL PUMP MOTOR RATINGS			
	HORSE POWER	208/230VAC 3Ø	
		208V	230V
FLA	3/4	3.5	3.2
	1	4.6	4.2
	1-1/2	6.6	6.0
	2	7.5	6.8
TOTAL FULL LOAD AMPS (FLA) IS DETERMINED BY USING THE FLA RATINGS FOR 3Ø AC INDUCTION MOTORS AS LISTED IN ARTICLE 430 OF THE NATIONAL ELECTRICAL CODE.			

NOTES:
1. SEE SHEET 7 FOR ADDITIONAL INFORMATION.
2. ---
3. POWER SERVICE CIRCUIT PROTECTION DEVICE SUPPLIED BY CUSTOMER.
4. THE 120V AC POWER CONTROL CIRCUIT MUST NOT BE USED AS A POWER SOURCE FOR FIELD CONTROL DEVICES.
5. FOR MULTIPLE BOILERS OPERATING WITH A SYSTEM AIR DAMPER WHEN IN A MASTER/MEMBER CONFIGURATION: ADD A JUMPER FROM TERMINAL TB-16 ON THE MASTER BOILER TO TERMINAL TB-16 ON ALL MEMBER BOILERS.
6. 'LOCAL' PUMP MOTOR CONTACTOR, OVERLOAD RELAY AND FUSE PART NOS. PER TABLE 1.
7. POWER SERVICE PER TABLE 2 AND LOCAL PUMP MOTOR FULL LOAD AMPS PER TABLE 3.

DIVISION	DRAWING DESCRIPTION			
RBI	CONNECTION DIAGRAM			
PRODUCT	DRAWING NUMBER			
CK3000	CK3000N#RA#0#A##C3G8M7P4X4			
	SHEET	SHEET SIZE	SCALE	REVISION
	3 OF 7	B	N/A	J

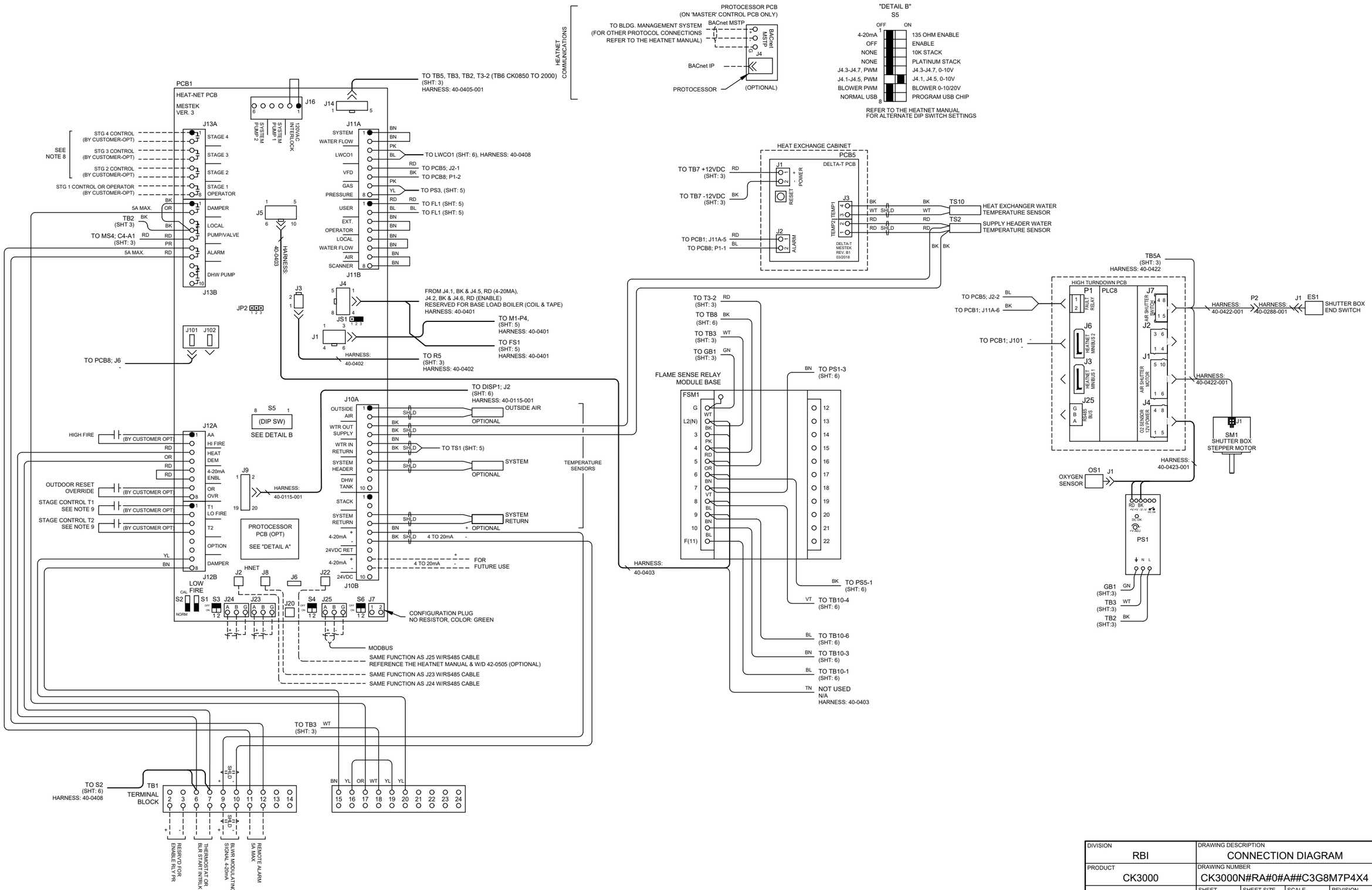

DIVISION	DRAWING DESCRIPTION			
RBI	CONNECTION DIAGRAM			
PRODUCT	DRAWING NUMBER			
CK3000	CK3000N#RA#0#A##C3G8M7P4X4			
	SHEET	SHEET SIZE	SCALE	REVISION
	4 OF 7	B	N/A	J

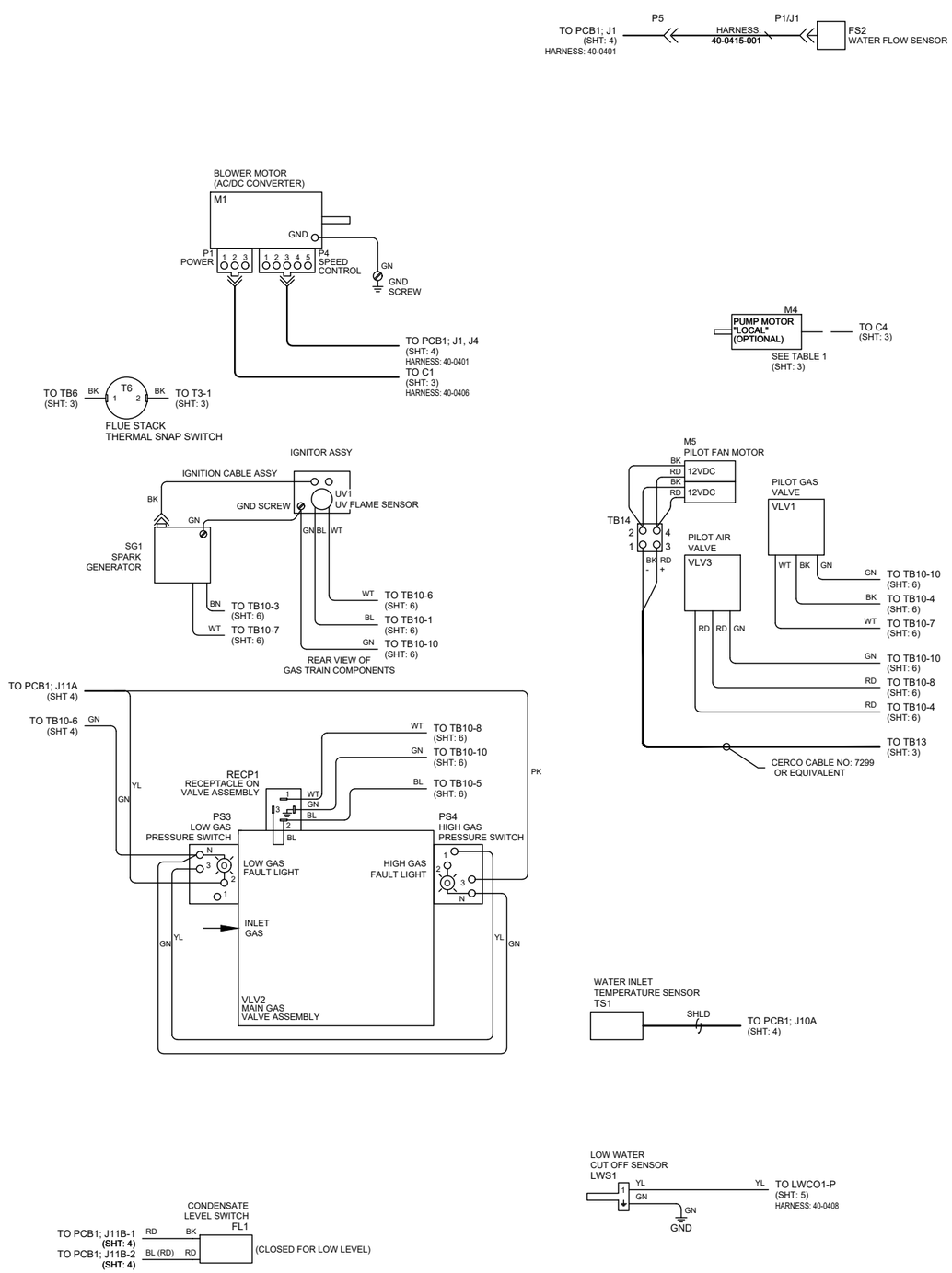

DIVISION	DRAWING DESCRIPTION			
RBI	CONNECTION DIAGRAM			
PRODUCT	DRAWING NUMBER			
CK3000	CK3000N#RA#0#A##C3G8M7P4X4			
	SHEET	SHEET SIZE	SCALE	REVISION
	5 OF 7	B	N/A	J

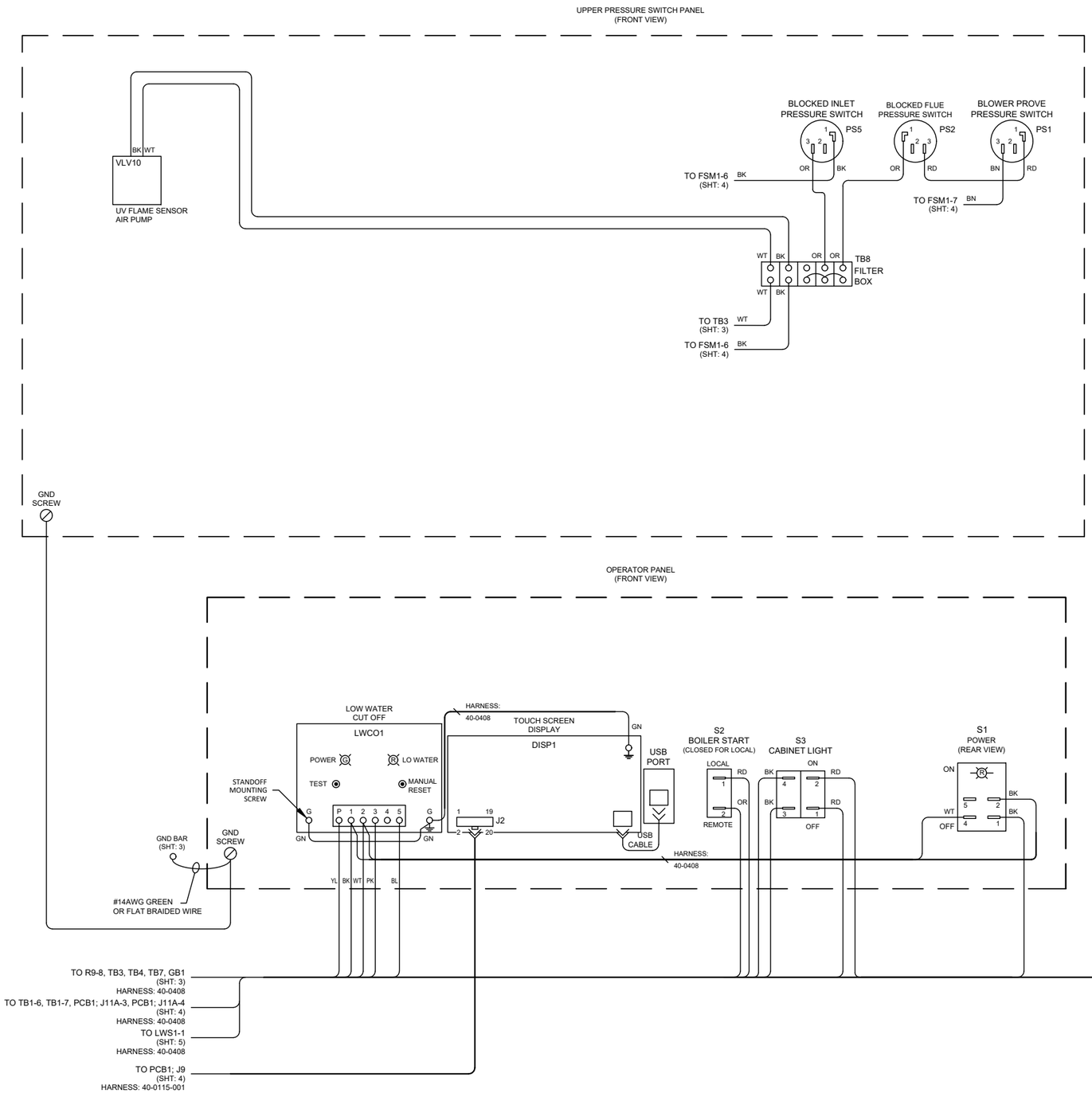

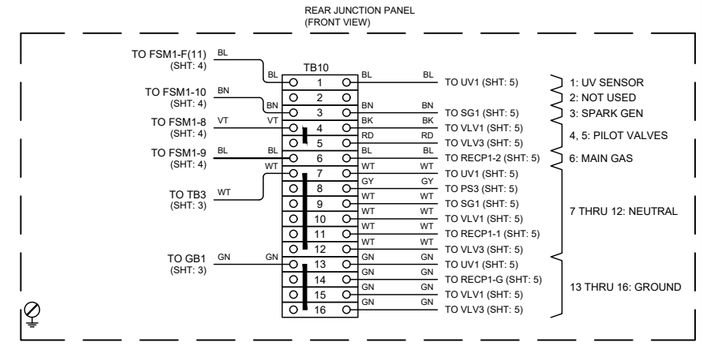

NOTES:
1. SEE SHEET 7 FOR ADDITIONAL INFORMATION.
2. ---
3. ---
4. THE 120VAC POWER CONTROL CIRCUIT MUST NOT BE USED AS A POWER SOURCE FOR FIELD CONTROL DEVICES.

DIVISION	DRAWING DESCRIPTION			
RBI	CONNECTION DIAGRAM			
PRODUCT	DRAWING NUMBER			
CK3000	CK3000N#RA#0#A##C3G8M7P4X4			
	SHEET	SHEET SIZE	SCALE	REVISION
	6 OF 7	B	N/A	J

1. MAIN GAS VALVE ASSEMBLY (VLV2)
2. MAIN ELECTRICAL CONTROL PANEL
3. UPPER PRESSURE SWITCH PANEL
4. OPERATOR PANEL
5. FLOW SENSOR (FS1)
6. SPARK GENERATOR (SG1) AND IGNITOR ASSEMBLY)
7. H-NET CONTROL BOARD
8. BLOWER MOTOR (M1)

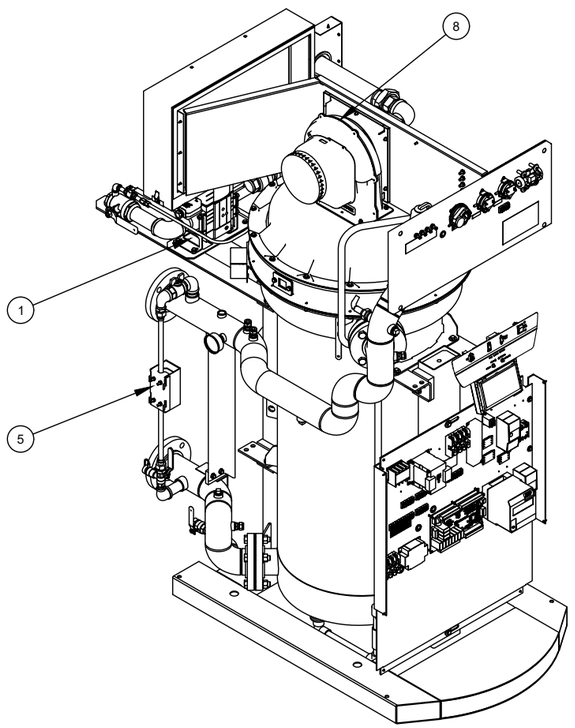

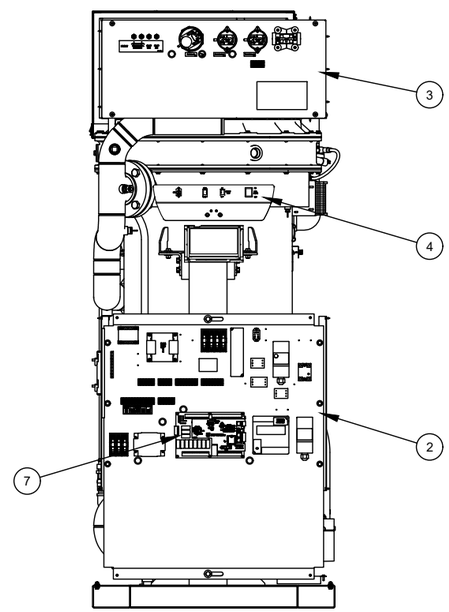

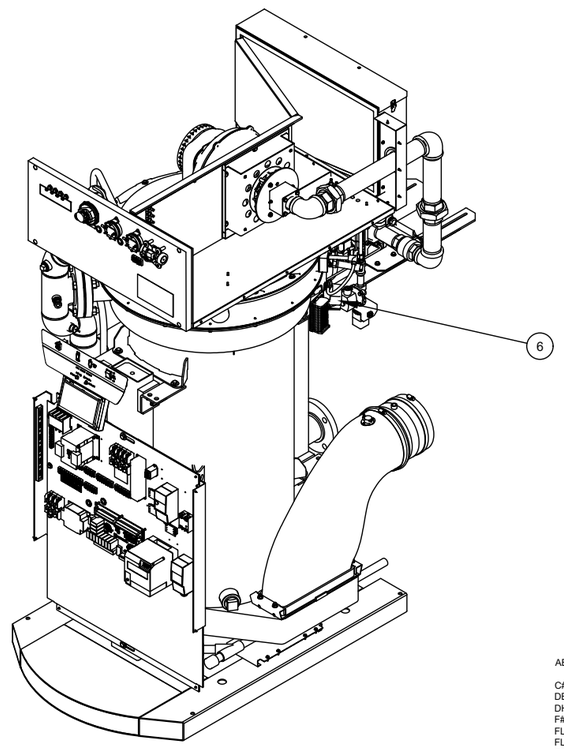

NOTES:

1. WIRE COLOR CODE SHALL BE AS FOLLOWS:
   BK-BLACK, RD-RED, BL-BLUE, GN-GREEN, WT-WHITE,
   PK-PINK, BN-BROWN, GY-GRAY, VT-VOILET, YL-YELLOW,
   OR-ORANGE, TN-TAN, GN/YL-GREEN/YELLOW

   WIRE CODE:
   FACTORY WIRING
   FIELD WIRING
   OPTIONAL WIRING

2. ALL WIRES SHALL BE #18AWG UNLESS SPECIFIED. WIRE TYPE SHALL BE TEW, 600V, STRANDED 16x30, WITH INSULATION RATED FOR 105° OR EQUIVALENT.

3. USE CABLE TIES, CABLE FASTENERS, SPADE TERMINALS, MALE CONNECTORS, WIRENUTS, ETC. AS REQUIRED.

4. LINE VOLTAGE WIRE AND LOW VOLTAGE WIRE SHALL BE KEPT SEPARATE AS MUCH AS POSSIBLE

5. LINE VOLTAGE SHALL NEVER RUN PARALLEL TO LOW VOLTAGE OR THROUGH THE SAME KNOCKOUT. IF LOW VOLTAGE AND LINE VOLTAGE MUST PASS EACH OTHER THEY SHALL PASS PERPENDICULAR TO EACH OTHER.

6. DO NOT RUN ANY SIGNAL CABLE NEAR SPARK GENERATOR.

ABBREVIATION:

C# - CONTACTOR 1,2,3 (C1, C2, ...)
DB - DISTRIBUTION BLOCK
DHW - DOMESTIC HOT WATER
F# - FUSE 1,2,3 (F1, F2, ...)
FL# - FLOAT SWITCH 1,2,3 (FL1, FL2, ...)
FLA - FULL LOAD AMPS
FS# - FLOW SWITCH 1,2,3 (FS1, FS2, ...)
FSM# - FLAME SENSE RELAY MODULE 1,2,3 (FSM1, FSM2, ...)
GB# - GROUND BAR 1,2,3 (GB1, GB2, ...)
IGN# - IGNITOR 1,2,3 (IGN1, IGN2, ...)
LT# - LIGHT 1,2,3 (LT1, LT2, ...)
LWCO - LOW WATER CUTOFF
LWS - LOW WATER SENSOR
OPT - OPTION
OL - OVERLOAD
M# - MOTOR 1,2,3 (M1, M2, ...)
PS# - PRESSURE SWITCH 1,2,3 (PS1, PS2, ...)
PWS# - POWER SUPPLY
S# - SWITCH 1,2,3 (S1, S2, ...)
SCCR - SHORT CIRCUIT CURRENT RATING
SG# - SPARK GENERATOR 1,2,3 (SG1, SG2, ...)
SHLD - SHIELDED CABLE
SS RELAY - SOLID STATE RELAY
TB# - TERMINAL BLOCK 1,2,3 (TB1, TB2, ...)
TS# - TEMPERATURE SENSOR (TS1, TS2, ...)
VLV# - VALVE 1,2,3 (VLV1, VLV2, ...)
XFMR# - TRANSFORMER 1,2,3 (XFMR1, XFMR2, ...)

DIVISION	DRAWING DESCRIPTION			
RBI	INFORMATION AND LAYOUT DIAGRAM			
PRODUCT	DRAWING NUMBER			
CK3000	CK3000N#RA#0#A##C3G8M7P4X4			
	SHEET	SHEET SIZE	SCALE	REVISION
	7 OF 7	B	N/A	J